Parts Manual

Model Fork Positioner

Serial Number 120C-HS-006

For Technical Assistance call: 800-227-2233, Fax: 888-329-8207
To Order Parts call: 888-227-2233, Fax: 888-329-0234
OR
Write: Cascade Corporation, P.O. Box 20187, Portland, OR 97220

Frame Group

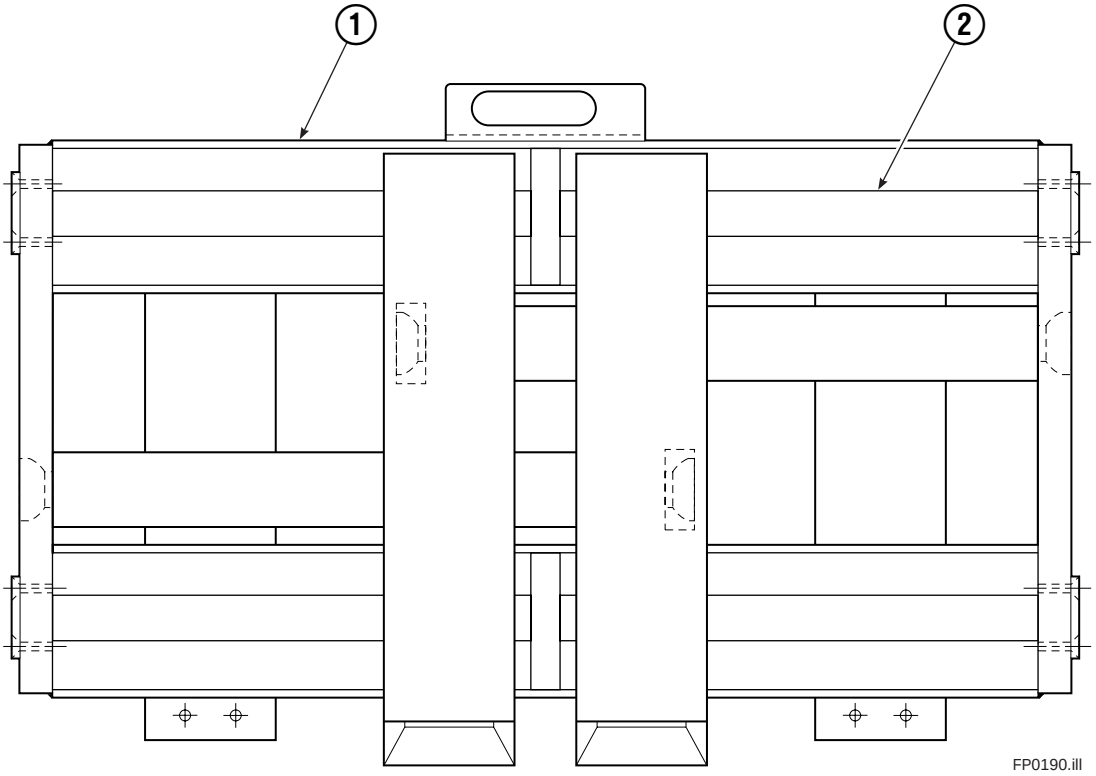

REF	QTY	PART NO.	DESCRIPTION
		214476	Frame Group, 48 in.
1	1	393350	Frame
2	2	830814	Shaft

Reference: Hydraulic Group 381520
Hose Group 384618
Cylinder 383034
Common Parts 381515

Hydraulic Valve Group

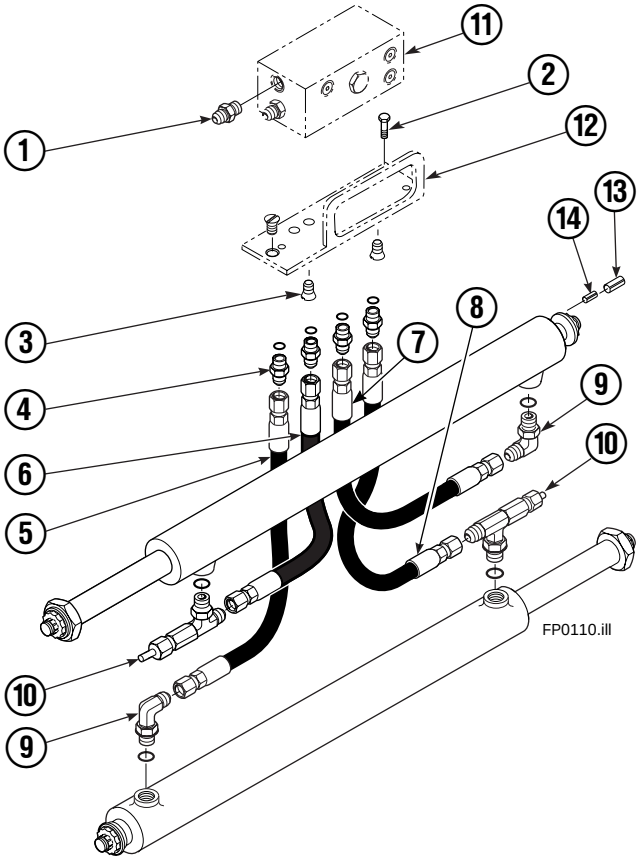

120C			
REF	**QTY**	**PART NO**	**DESCRIPTION**
		381520	Hydraulic Valve Group ★
		384618	Hose Group ▲
1	1	601377	Fitting, 8-8
2	1	643524	Capscrew
3	3	4750	Capscrew, .375x.750
4	4	611288	Fitting, 6-8
5	1	681231	Hose
6	1	380315	Hose
7	1	380315	Hose
8	1	681231	Hose
9	2	601676	Fitting-90, 6-6
10	2	617487	Elbow Restrictor ●
11	1	668861	Valve Assembly ■
12	1	844137	Bracket
13	2	7961	Roll Pins
14	2	7882	Roll Pins

★ Includes items 1-4 & 9-12.
▲ Includes items 5-8.
● See Elbow Restrictor page for parts breakdown.
■ See Valve Assembly page for parts breakdown.

Restrictor Fitting

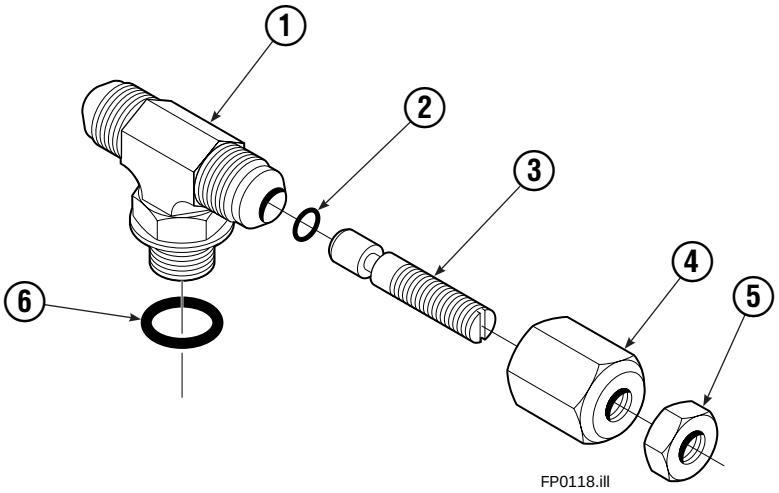

REF	QTY	PART NO.	DESCRIPTION
		617487	Restrictor Assembly
1	1	617486	Tee
2	1	2698	O-Ring
3	1	11100	Setscrew
4	1	11099	Cap
5	1	5715	Jam Nut
6	1	2840	O-Ring

Check Valve
Non-Sideshift

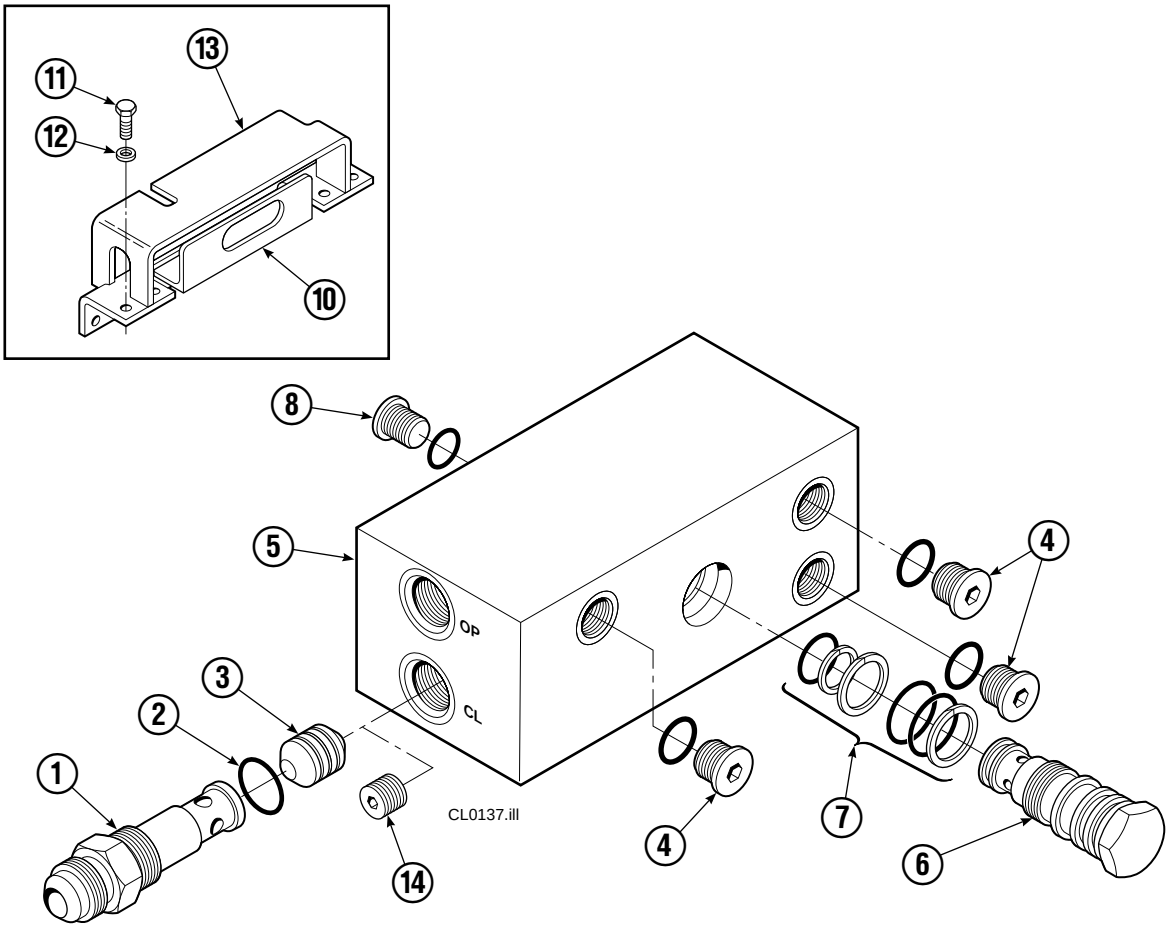

REF	QTY	PART NO.	DESCRIPTION
★		668861	Check Valve - Non-Sideshift
1	1	667490	Special Fitting
● 2	2	2841	O-Ring
3	1	667471	Spool
4	3	609455	Fitting
5	1	668862	Valve Body
6	1	678270	Check Valve - V.P.O.
● 7	1	661347	Service Kit
8	1	604510	Fitting, 6
10	1	▲	Bracket
11	4	670004	Capscrew, 1/2 NC x 1.25
12	4	6232	Washer
13	1	670000	Guard
■14	1	676343	Regeneration Elimination Plug
		668864	Service Kit

● Included in Service Kit 668864.
★ Includes items 1 thru 8 only.
▲ See Frame and Weldment Assembly page.
■ For eliminating regeneration circuit only.
(See Technical Bulletin Number 121)

Cylinder

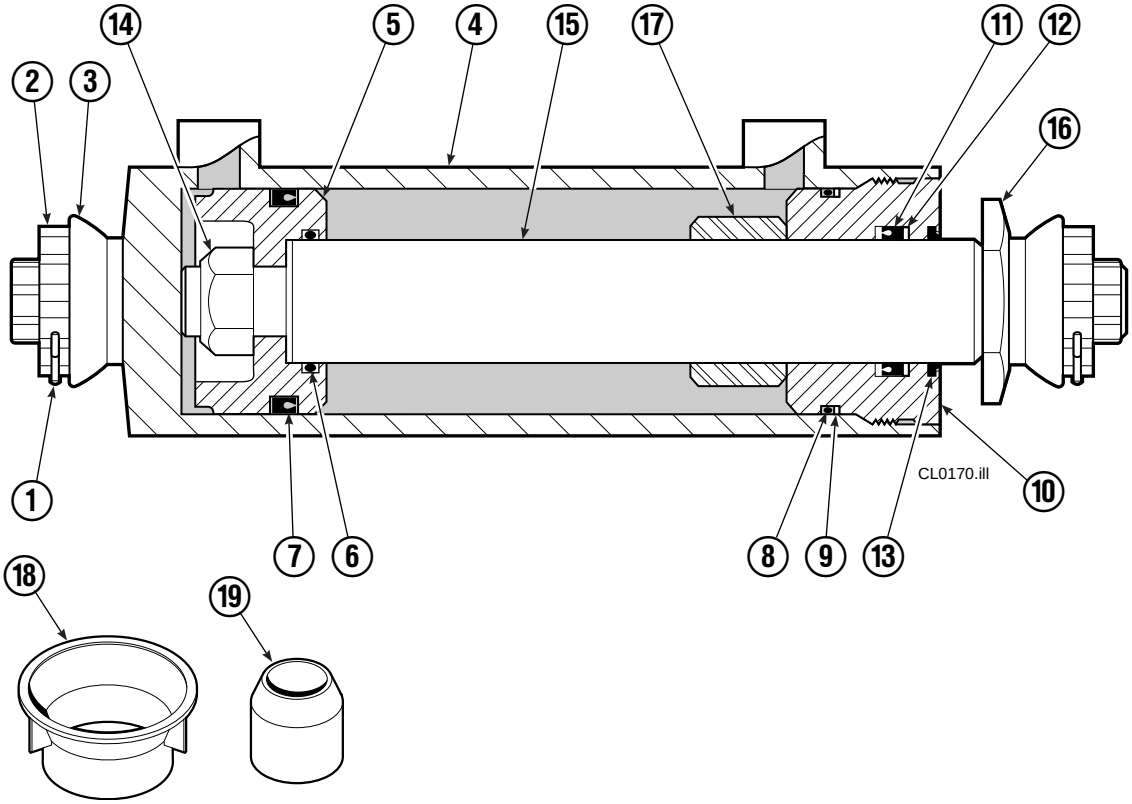

120C			
REF	QTY	PART NO.	DESCRIPTION
		383034	Cylinder Assembly
1	2	■ 6511	Cotter Pin
2	2	■ 667667	Retainer
3	2	■ 667668	Nut
4	1	564906	Shell
5	1	558402	Piston
6	1	✕ 2722	O-Ring
7	1	✕ 557376	Seal
8	1	✕ 2791	O-Ring
9	1	✕ 615134	Back-Up Ring
10	1	667675	Retainer
11	1	✕ 662451	Seal
12	1	✕ 638246	Nylon Ring
13	1	✕ 628047	Wiper
14	1	561012	Nut
15	1	564954	Rod
16	1	667676	Washer
17	1	829236	Spacer
18	1	✕ 671049	Seal Loader, Piston
19	1	✕ 671052	Seal Loader, Retainer
		667723	Service Kit

✕ Included in Service Kit.
■ Included in Nut Service Kit 668925.
Ref: S-5564, S-5565

Common Parts Group

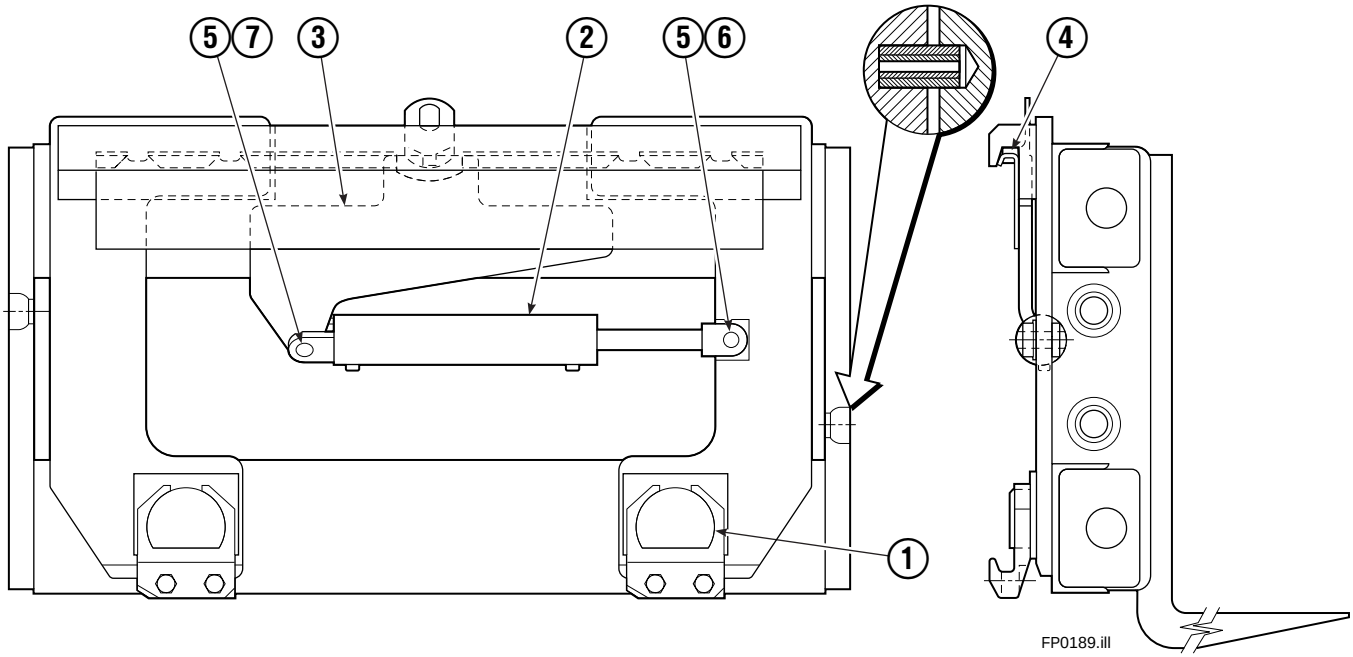

120C			
REF	**QTY**	**PART NO.**	**DESCRIPTION**
		381515	Common Parts Group
1	2	676650	Bearing - Lower
2	1	686243	Cylinder Assembly ▲
3	1	841031	Anchor Bracket Weldment
4	2	672018	Bearing Segment - Upper
5	2	686217	Cotter Pin
6	1	686214	Pin - Clevis
7	1	686215	Pin - Clevis

▲ See Sideshift Cylinder page for parts breakdown.

Sideshift Cylinder

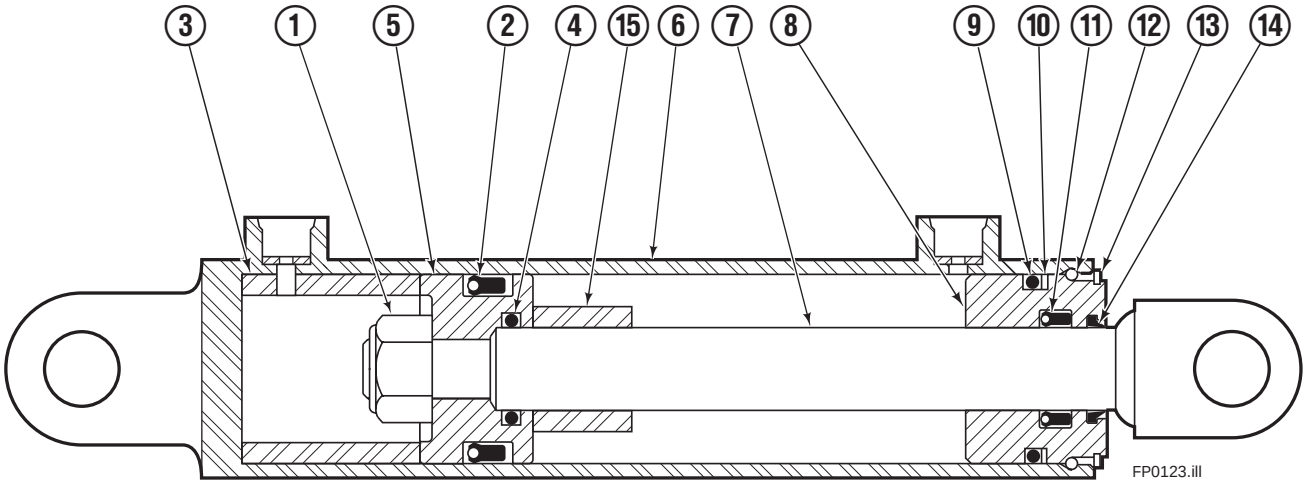

REF	QTY	PART NO.	DESCRIPTION
		686243	Cylinder Assembly
1	1	561012	Nut
■ 2	1	662457	Seal
3	1	564562	Spacer – Head
■ 4	1	2718	O-Ring
5	1	561427	Piston
6	1	561422	Shell
7	1	561422	Rod
8	1	561428	Retainer
■ 9	1	2791	O-Ring
■10	1	615134	Back-up Ring
■11	1	662449	Seal
12	1	561429	Retaining Ring
13	1	7215	Snap Ring
■14	1	626468	Wiper
15	1	--–	Spacer – Rod
		561430	Service Kit

■ Included in Service Kit 561430.

Ref: S-6053, S-6054

Fork Group

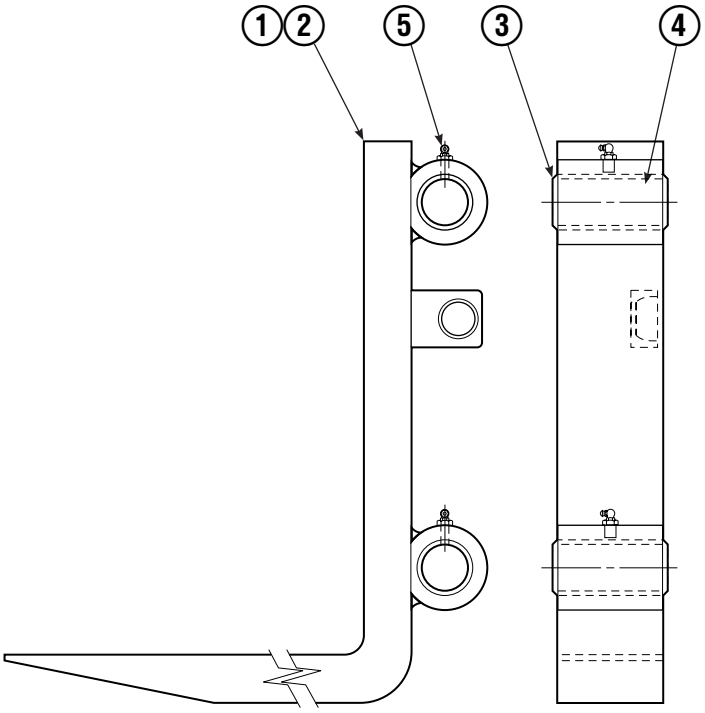

FP0191.ill

REF	QTY	PART NO.	DESCRIPTION
		214463	Fork Group
1	1	840211	Fork, L.H.
2	1	840206	Fork, R.H.
3	8	7223	Retaining Ring
4	4	828468	Bushing
5	4	828471	Lube Fitting

Mounting Group

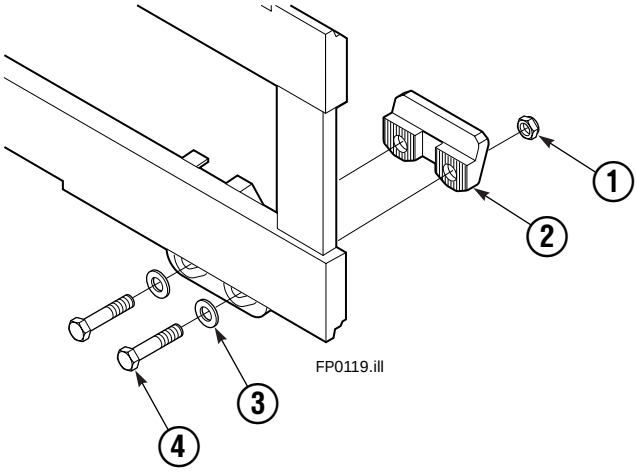

120C/150C Class IV			
REF	**QTY**	**PART NO.**	**DESCRIPTION**
		381517	Mounting Group
1	4	553857	Nut
2	2	678034	Lower Hook
3	4	667225	Washer
4	4	638601	Capscrew

Backrest

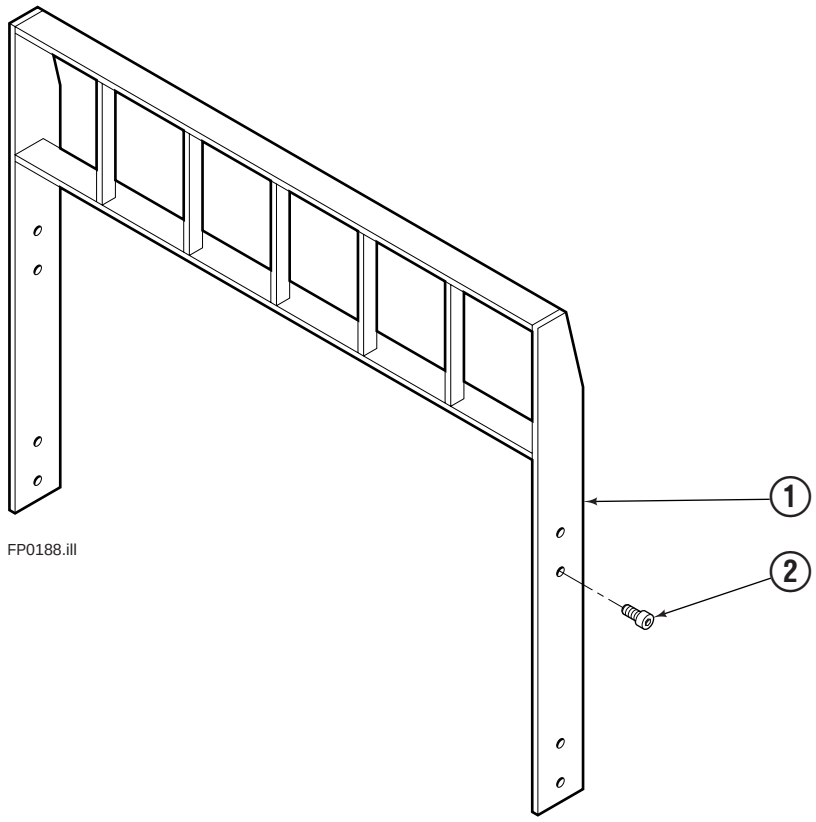

FP0188.ill

REF	QTY	PART NO.	DESCRIPTION
		214446	Backrest
1	1	830916	Backrest Weldment
2	8	4771	Capscrew

Reference: S-8604

Do you have questions you need answered right now? Call your nearest Cascade Parts Department.

Cascade Corporation
2501 Sheridan Avenue
Springfield, OH 45505
Tel: 888-CASCADE (227-2233)
FAX: 888-329-0234

Cascade Canada Inc.
5570 Timberlea Blvd.
Mississauga, Ontario
Canada L4W-4M6
Tel: 905-629-7777
FAX: 905-629-7785

Cascade GmbH
D-41199 Monchengladbach
Klosterhofweg 52
Germany
Tel: 21-66-602091
FAX: 21-66-680947

Cascade Finland
01370 Vantas
Finland
Tel: 358-0-836-1925
FAX: 358-0-836-1935

Cascade N.V.
European Headquarters
P.O. Box 3009
1300 El Almere
Damsluisweg 56
1332 ED Almere
The Netherlands
Tel: 31-36-5492911
FAX: 31-36-5492964

Cascade N.V.
Benelux Sales and Service
P.O. Box 3009
1300 El Almere
Damsluisweg 56
1332 ED Almere
The Netherlands
Tel: 31-36-5492950
FAX: 31-36-5492974

Cascade (UK) Ltd.
15, Orgreave Crescent
Dore House Industrial Estate
Handsworth
Sheffield S13 9NQ
England
Tel: 742-697524
FAX: 742-695121

Cascade Scandinavia
Hydraulik A.B.
Muskötgatan 19, E8-9
S25466 Helsingborg
Sweden
Tel: 42-151135
FAX: 42-152997

Cascade Norway
Østerliveien 37A
1153 Oslo
Norway
Tel: 47-22-743160
FAX: 47-22-743157

Cascade France S.A.R.L.
11, Rue Jean Charcot
Zone Industrielle Sud or
B.P. 22
91421 Morangis Cedex
France
Tel: 1- 64547501
FAX: 1-9790584

Cascade Hispania S.A.
Avenida De La Fabregada, 7
Hospitalet De Llobregat
Barcelona
Spain
Tel: 3-335-5158
FAX: 3-335-4756

Cascade Japan Ltd.
5-5-41,
Torikai Kami
Settsu, Osaka
Japan, 566
Tel: 81-726-53-3490
FAX: 81-726-53-3497

Cascade Korea
Room 508, Pum Yang Bldg.
750-14, Bang Bac-Dong
Se-Cho Ku, Seoul
Korea
Tel: 2599-7131 ext. 512
FAX: 2533-8089

HYCO-Cascade Pty. Ltd.
87 Antimony Street
Carole Park,
Brisbane 4300
Australia
Tel: 7-271-1966
FAX: 7-271-3830

HYCO-Cascade (NZ) Ltd.
15 Ra Ora Drive, East Tamaki
P.O. Box 38-440
Howick, Auckland
New Zealand
Tel: 9-273-9136
FAX: 9-273-9137

Cascade (Africa) Pty. Ltd.
P.O. Box 625, Isando 1600
60A Steel Road
Sparton, Kempton Park
South Africa
Tel: 975-9240
FAX: 394-1147

Cascade-Xiamen
Wanshan No. 1 Workshop
Huli Road
Xiamen 361006
Fujian, PRC
Tel: 592-562-4600
FAX: 592-562-4671

Cascade (Singapore)
Trading Co.
Four Seasons Park
Autumn Block - Apt. 1802
12 Cascaden Walk
Singapore
Tel: 65-834-1935
FAX: 65-834-1936

cascade™

© Cascade Corporation 1997